22MAT220 - MATHEMATICS FOR COMPUTING 3

ANALOG COMPUTING REPORT

DAMPED HARMONIC OSCILLATOR

D1-Team Members:

SANJAY KUMAR S– CB.SC.U4AIE24305

ARJUN – CB.SC.U4AIE24354

DHAKSHIN – CB.SC.U4AIE24313

KNEEV S JAIN–CB.SC.U4AIE24364

Objective:

The objective of this project is to design, build, and test an analog computer circuit capable of solving a second-order ordinary differential equation (ODE). Using three LM741 operational amplifiers, the circuit will model the behavior of a **damped harmonic oscillator**. The entire system will be powered, controlled, and visualized using the ADALM2000 (M2K) and its Scopy software suite, demonstrating the principles of analog computation within a constrained power and voltage environment (±5V).

Operational Amplifier:

The **741 op-amp** is a general-purpose integrated circuit used for amplification, filtering, and signal processing. It provides high voltage gain, high input impedance, and low output impedance, making it ideal for analog applications such as amplifiers and signal conditioners. It is internally compensated for stability and usually operates with a dual power supply of ±15V.

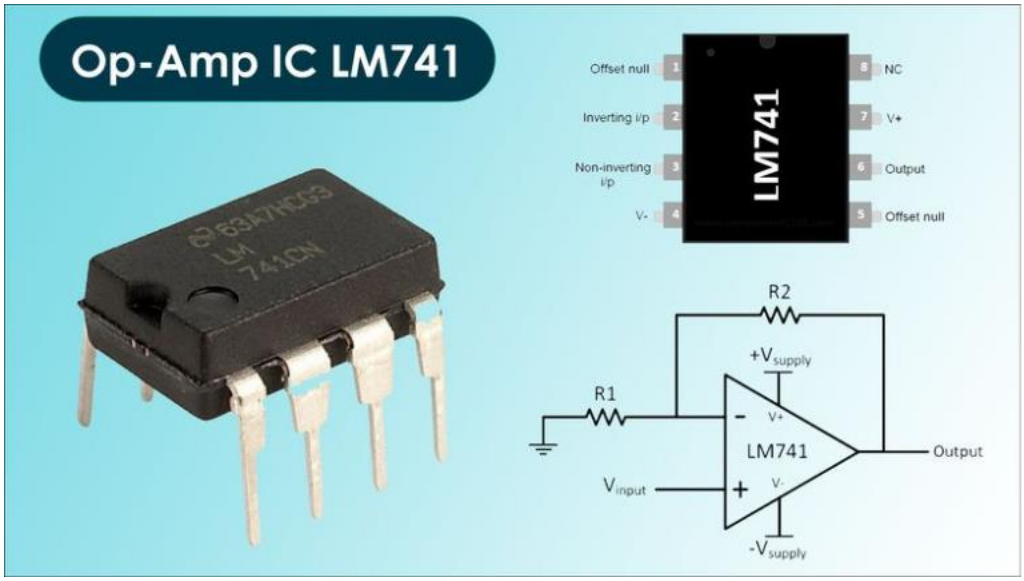

The **µA741** comes in an **8-pin package**, where **Pin 1 and 5** are for offset null adjustment, **Pin 2** is the inverting input, **Pin 3** is the non-inverting input, **Pin 4** is the negative supply (V−), **Pin 6** is the output, **Pin 7** is the positive supply (V+), and **Pin 8** is unused. It's widely used in amplifiers, filters, oscillators, and comparator circuits due to its reliability and ease of use.

ADALM M2K:

The **ADALM2000 (Active Learning Module M2K)** is a compact, USB-powered, multifunctional data acquisition and signal analysis device developed by **Analog Devices**. It is designed for students, hobbyists, and engineers to learn and experiment with analog and digital

electronics. The M2K acts as a portable lab, replacing bulky instruments like oscilloscopes, waveform generators, and power supplies, making it ideal for hands-on circuit learning and testing through the **Scopy** software interface

The **ADALM2000** provides multiple I/O functions through its **12-pin connector**, including **two analog input channels** (oscilloscope), **two analog output channels** (waveform generator), **digital I/O pins**, **power supplies (±5V, +3.3V)**, and a **ground reference**. These features allow users to measure, generate, and control both analog and digital signals in real time. With its wide functionality and portability, the M2K is widely used in educational labs and prototyping environments for testing circuits, debugging embedded systems, and understanding signal behavior interactively.

Inverting Amplifier:

An **inverting amplifier** is a basic op-amp configuration where the input signal is applied to the **inverting terminal (−)** through a resistor, while the **non-inverting terminal (+)** is grounded. This setup produces an **output signal that is 180° out of phase** with the input, meaning it inverts the signal's polarity. The amplification is controlled by the ratio of two resistors, providing precise and stable voltage gain.

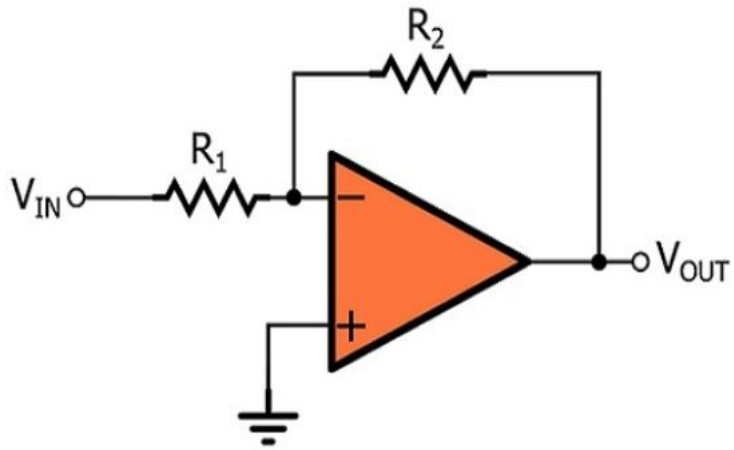

In this circuit, the **input resistor (Rin)** connects the input signal to the inverting input, and the **feedback resistor (Rf)** connects the output back to the inverting input. The voltage gain of the inverting amplifier is given by **Av = −(Rf / Rin)**, where the negative sign indicates the phase inversion. The **output voltage (Vout)** is therefore **Vout = −(R2 / R1) × Vin**. This configuration is commonly used in audio mixers, signal processing circuits, and control systems where accurate and inverted signal amplification is required

Integrator:

An **integrator circuit** is an op-amp configuration that performs the mathematical operation of **integration**, producing an output voltage proportional to the **time integral of the input signal**. It is mainly used to convert a square wave input into a triangular wave or to compute the area under a signal curve. The integrator is essential in analog computers, waveform generators, and signal-processing systems for converting one form of signal into another.

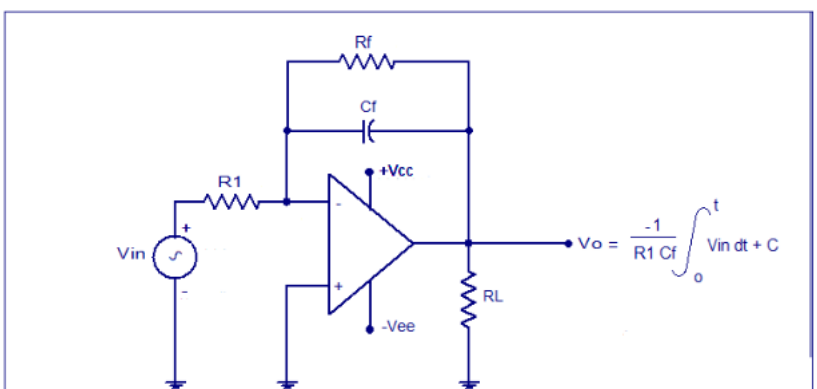

Fig 4

In this circuit, a **resistor (R)** is connected to the **inverting input (−)** and a **capacitor (C)** is placed in the **feedback path** between the output and the inverting input. The **non-inverting input (+)** is grounded. The output voltage is given by **Vout = −(1/R1C)f ∫ Vin dt**, where the

negative sign indicates a 180° phase shift between the input and output. This means the output decreases or increases linearly depending on the input polarity, making it ideal for generating ramp signals and performing analog integration in control and signal applications.

Damped Harmonic Oscillator Circuit :

The circuit is implemented using a **State-Variable Filter (KHN Biquad)** topology. This configuration uses one op-amp as a summing amplifier and two op-amps as integrators to solve the target differential equation. The low-pass output of the final integrator directly provides the solution, y(t).

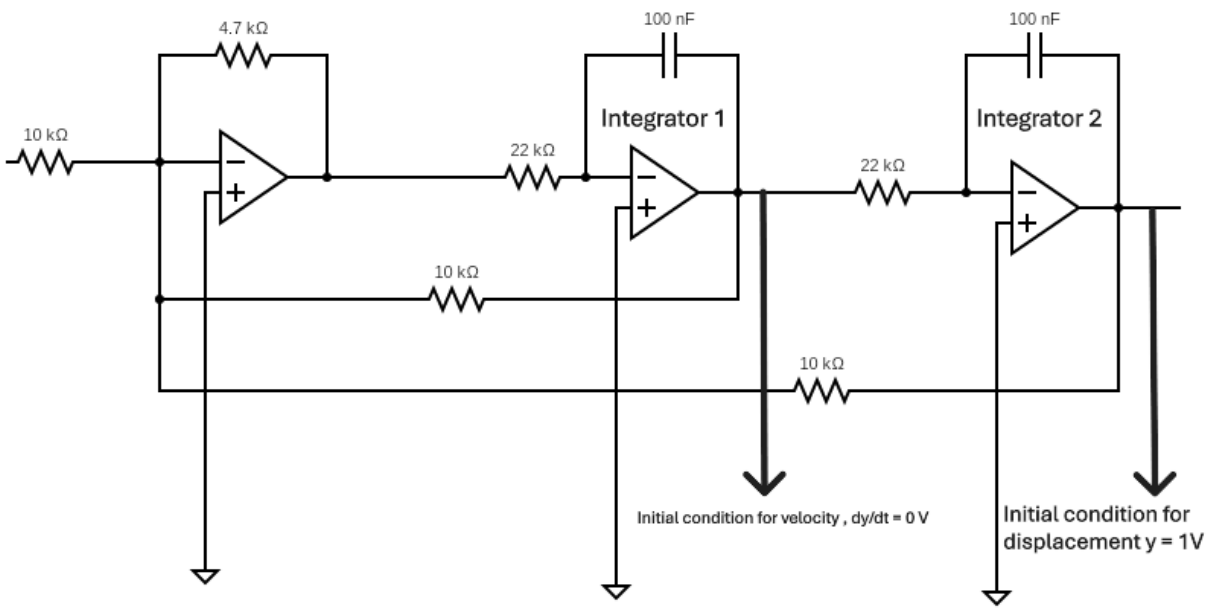

The general form for a second-order linear ordinary differential equation that describes a damped harmonic oscillator is:

$$\frac{d^2y}{dt^2} + 2\varsigma\omega_n\frac{dy}{dt} + \omega_n^2 y = \omega_n^2 u(t)$$

Let's break down the notation, especially the derivative terms:

- $\frac{d^2y}{dt^2}$ **(Second Derivative of y with respect to t):**
  - This term represents the **second derivative** of the dependent variable y with respect to the independent variable t.
  - In a physical system, if y(t) is position, then $\frac{d^2y}{dt^2}$ represents **acceleration**.

- The notation d^2y means "the second differential of y" and dt^2 means "the square of the differential of t" (which is typically understood as (dt^2)). It's a single, indivisible symbol for the second derivative, not d^2 divided by dt^2. It signifies the rate of change of the rate of change of y with respect to t.
- In our analog computer, the output of the first op-amp (A1) will be proportional to $-\frac{d^2y}{dt^2}$.

- $\frac{dy}{dt}$ **(First Derivative of y with respect to t):**
  - This term represents the **first derivative** of y with respect to t.
  - If y(t) is position, then $\frac{dy}{dt}$ represents **velocity**.
  - It signifies the instantaneous rate of change of y with respect to t.
  - In our analog computer, the output of the second op-amp (A2) will be proportional to $\frac{dy}{dt}$.
- **y (Dependent Variable):**
  - This is the variable we are solving for, typically representing the **output** or "position" of the system at any given time t.
  - In our analog computer, the output of the third op-amp (A3) will be proportional to y(t).
- **u(t) (Input/Forcing Function):**
  - This is an **external input** that "drives" or "excites" the system. It can be a constant voltage, a step, a sine wave, etc.
  - In our analog computer, this comes from the ADALM2000's Arbitrary Waveform Generator (AWG).
- **ωn (Natural Frequency):**
  - This is the frequency at which the system would oscillate if there were **no damping**. It's measured in radians per second (rad/s).
- **ζ (Damping Ratio):**
  - This dimensionless parameter describes how **quickly oscillations decay** in a damped system.
    - If ζ<1: **Underdamped** (oscillates with decreasing amplitude).
    - If ζ=1: **Critically Damped** (returns to equilibrium as quickly as possible without oscillating).
    - If ζ>1: **Overdamped** (returns to equilibrium slowly without oscillating).

The specific equation our circuit solves (given your component constraints) is:

$$\frac{d^2y}{dt^2} + 214\frac{dy}{dt} + (312)^2y = (312)^2u(t)$$

By comparing this to the general form, we can identify:

- $2\varsigma\omega_n = 214$
- $\omega_n^2 = (312)^2 \Longrightarrow \omega_n = 312\ \frac{rad}{s}$

From these, we derive:

- $f_n = \frac{\omega_n}{2\pi} \approx 50\ Hz$
- $\varsigma = \frac{214}{(2\times312)} \approx 0.34$

This ensures that the circuit visually demonstrates an **underdamped oscillation** at an observable frequency.

Power Connection for the Circuit :

All power is supplied by the ADALM2000. No external supplies are needed.

- **Positive Supply (V+)**: Connect the **+5V** supply pin from the M2K to **Pin 7** of all three LM741 op-amps.
- **Negative Supply (V-)**: Connect the **-5V** supply pin from the M2K to **Pin 4** of all three LM741 op-amps.
- **Ground (GND)**: Connect the **GND** pin from the M2K to a common ground rail on your breadboard. This rail will serve as the 0V reference for the entire circuit.

Placement of Resistors and Capacitors

Component placement is critical for the circuit to function correctly.

- **Op-Amp A1 (Summer):**
  - **4.7kΩ Resistor**: This is the feedback resistor, connected between Pin 2 (inverting input) and Pin 6 (output).
  - **Three 10kΩ Resistors**: These are the input resistors. All three connect to Pin 2 (the summing node). Their other ends connect to:
    - The main input signal, u(t).
    - The output of Op-Amp A2 (damping feedback).
    - The output of Op-Amp A3 (position feedback).
- **Op-Amp A2 (First Integrator):**
  - **22kΩ Resistor**: This is the input resistor, connecting the output of A1 (Pin 6) to the input of A2 (Pin 2).

    - **100nF Capacitor**: This is the feedback component, connected between Pin 2 and Pin 6 of A2.
- **Op-Amp A3 (Second Integrator):**
    - **22kΩ Resistor**: This is the input resistor, connecting the output of A2 (Pin 6) to the input of A3 (Pin 2).
    - **100nF Capacitor**: This is the feedback component, connected between Pin 2 and Pin 6 of A3.

Connection Establishment

1. **Power Up**: Wire all power and ground connections to the op-amps first.
2. **Ground Non-Inverting Inputs**: Connect **Pin 3** (non-inverting input) of all three op-amps directly to the ground rail.
3. **Build the Summer (A1)**: Connect the 4.7kΩ feedback resistor and the three 10kΩ input resistors to Pin 2 of A1.
4. **Build the Integrators (A2 & A3)**:
    a. Connect the output of A1 (Pin 6) to the 22kΩ input resistor of A2.
    b. Connect the 100nF feedback capacitor to A2.
    c. Connect the output of A2 (Pin 6) to the 22kΩ input resistor of A3.
    d. Connect the 100nF feedback capacitor to A3.
5. **Establish Feedback Loops**:
    a. Connect the output of A2 (Pin 6) back to one of the 10kΩ input resistors on A1.
    b. Connect the output of A3 (Pin 6) back to another 10kΩ input resistor on A1.

Initial Condition Setting

To observe the system's natural response, you must manually set an initial voltage on the final integrator's capacitor.

1. **Hardware**: Connect a **momentary push-button switch**. One terminal connects to the **Vp+** pin on the M2K. The other terminal connects to the **output of Op-Amp A3 (Pin 6)**.
2. **Procedure**: Pressing the button forces the output voltage y(t) to the voltage set by Vp+ (e.g., +1V), effectively "charging" the initial condition. Releasing the button lets the circuit solve the equation starting from that condition.

ADALM M2K (Scopy) Setting

- **Power Supply Tool:**

    - Enable the **Master Enable** switch.
    - Turn on the **+5V** and **-5V** supplies.
    - Enable the **User Supply Vp+** and set its value to **+1.0V**.
- **Signal Generator (AWG) Tool (for step response):**
    - **Channel**: W1
    - **Waveform**: Square
    - **Amplitude**: 500 mV (creates a 1V peak-to-peak step)
    - **Frequency**: 5 Hz (low enough to see the full response)
- **Oscilloscope Tool:**
    - **Channel 1**: Connect **1+** (Orange wire) to the output of A3 (Pin 6). Connect **1-** to the ground rail.
    - **Time Base**: Start with **5 ms/div**.

Final Computation (Running the Experiment)

A. Forced Response (with AWG Input)

1. Connect the **AWG (W1)** to the main input 10kΩ resistor of A1.
2. Enable the AWG channel in Scopy.
3. Observe the oscilloscope. You will see the output y(t) as a classic **underdamped step response**. For each rising edge of the square wave, the output will overshoot its target (0.5V), ring a few times, and settle.

B. Natural Response (with Initial Condition)

1. **Disconnect the AWG** from the circuit. Connect that input 10kΩ resistor to the **ground rail**.
2. **Press and hold** the initial condition push-button. The oscilloscope trace will jump to a flat +1V.
3. **Release the button**. The oscilloscope will trigger and display a **decaying sine wave** starting at +1V and oscillating around 0V. This is the graphical solution to the homogeneous differential equation, showing the system's natural behavior.

    - **Trigger**: Set to Channel 1, Rising Edge, and a level of around 100 mV to capture the step response. For the initial condition test, use a Falling Edge trigger at 0.9V.